Commercial FUEL SOLUTIONS

Instruction Manual

Pneumatic tank contents gauge

☞ Read manual before use!

☞ Observe all safety information!

☞ Keep manual for future use!

Contents

1 About this instruction manual 3
1.1 Explanation of symbols and typeface 3
2 Safety 3
2.1 Intended use 3
2.2 Predictable incorrect application 4
2.3 Safe handling 4
2.4 Modifications to the product 4
2.5 Use of spare parts and accessories 4
2.6 Liability information 4
3 Product description 5
4 Specifications 6
5 Installation and commissioning 7
5.1 Installing the device 7
5.2 Adjusting the measuring range and the Zero correction 7
5.3 Installing capillary line 8
6 Operation 9
7 Maintenance 10
8 Troubleshooting 10
9 Spare parts and accessories 11
10 Warranty 11
11 Copyright 11
12 Customer satisfaction 11
13 Addresses 12
14 Appendix 12
14.1 Determining the measurement range 12

1 About this instruction manual

This instruction manual is part of the product.

▶ Read this manual before using the product.

▶ Keep this manual during the entire service life of the product and always have it readily available for reference.

▶ Always hand this manual over to future owners or users of the product.

1.1 Explanation of symbols and typeface

Symbol	Meaning
☑	Prerequisite for an activity
▶	Activity consisting of a single step
1.	Activity consisting of several steps
↳	Result of an activity
•	Bulleted list
`Text`	Indication on a display
Highlighting	Highlighting

2 Safety

2.1 Intended use

The pneumatic tank contents gauge is exclusively suitable for the level measurement of the following liquids:

- Fuel oil EL according to DIN 51603-1
- Diesel fuel according to EN 590
- Fatty acid methyl ester (FAME) as a fuel oil according to EN 14213
- Fatty acid methyl ester (FAME) as biodiesel according to EN 14214
- Inflammable liquids of danger class AIII and non-inflammable liquids which meet the following requirements:
  - The fumes of the liquid do not attack plastics (PA, PS, PE) or Cu-, Zn- and Sn-alloys or elastomers.
  - The liquid is not classified as hazardous class AI, AII or B.
  - Kinematic viscosity < 300 mm²/s.

Any use other than the use explicitly stated in this instruction manual is not permitted.

2.2 Predictable incorrect application

The pneumatic tank contents gauge must never be used in the following:

- Level measurement of liquids other than those listed above.
- Hazardous areas (ex)
  If the device is operated in hazardous areas, sparks may cause deflagrations, fires or explosions

2.3 Safe handling

This product represents state-of-the-art technology and is manufactured in accordance with the pertinent safety regulations. Each unit is subjected to a function and safety test prior to despatch.

▶ Operate the product only when it is in perfect condition. Always observe the instruction manual, all pertinent local and national directives and guidelines as well as health and safety regulations and directives regarding the prevention of accidents.

2.4 Modifications to the product

Changes or modifications made to the product by unauthorised persons may lead to malfunctions and are prohibited for safety reasons.

2.5 Use of spare parts and accessories

Use of unsuitable spare parts and accessories may cause damage to the product.

▶ Use only the manufacturer's genuine spare parts and accessories (refer to chapter 9, page 11).

2.6 Liability information

The manufacturer shall not be liable for any direct or consequential damage resulting from failure to observe the technical instructions, guidelines and recommendations.

The manufacturer and the sales company shall not be liable for costs or damages incurred by the user or by third parties in the use or application of this device, particularly in case of improper use of the device, misuse or malfunction of the connection, malfunction of the device or of connected devices. The manufacturer or the sales company shall not be liable for damages resulting from any use other than the use explicitly stated in this instruction manual.

The manufacturer shall not be liable for misprints.

3 Product description

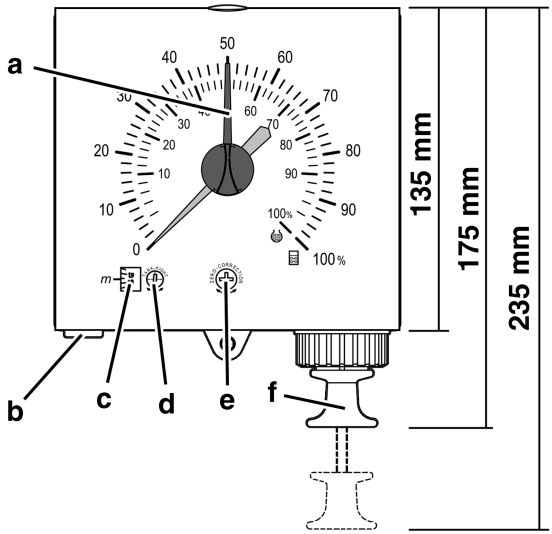

a Reference pointer

b Capillary connection

c Adjustment scale for measuring range

d Adjustment screw for measuring range

e Adjustment screw for Zero point correction

f Pump plunger

Fig. 1: Front view

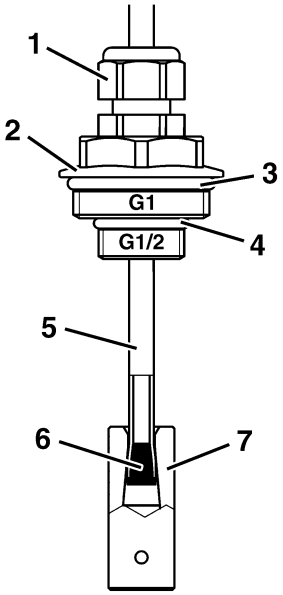

1 Cable gland PG9

2 Screw-in tank adapter G½-G1

3 O ring Ø 30 x 3 mm

4 O ring Ø 18 x 2,5 mm

5 Stand pipe

6 Conical washer

7 Balance chamber

Fig. 2: Tubing kit

Gauge measures the hydrostatic liquid pressure at the tank bottom. The pressure varies according to liquid height and specific gravity of

the medium to be measured. The pressure is measured approx. 20 mm above the tank bottom and displayed on the gauge dial.

When operating the pump of the a pneumatic pressure is built up in the capillary measuring line until that pressure is equal to the liquid head pressure at the bottom of the tank. The pressure created by the pump has displaced the liquid in the capillary tubing inside the tank and the air bubbles out of the end of the standpipe in the tank. The pointer has reached its highest indication point and stops at that level.

Enables the user to obtain a relativley accurate consumption control thereby allowing a timely reordering of fuel. The driver of the oil delivery vehicle can use the gauge to check whether the tank can accept the ordered quantitiy of fuel.

4 Specifications

Table 1: Specifications

Parameter	Value
General	
Dimensions housing (W x H x D)	145 x 135 x 65 mm
Weight	400 g
Housing material	Impact resistant plastic
Remote indication	Up to 50 m
Measuring range	Fully adjustable: 900-3000 mm tank height for measurement of fuel oil EL or diesel fuel with an average density of 840 kg/m³ at +15 °C
Mechanism	Linear capsule type, overpressure protected
Accuracy	± 3 % of full scale value
Indication	Standard: 0-100 %-liquid height for rectangular and horizontal cylindrical tanks For additional slide-in scales with indication in litres for standardised tanks as well as special slide-in scales see chapter 9, page 11.
Operating temperature range	
Ambient	-5 °C to +55 °C

Parameter	Value
Tubing kit materials	
Stand pipe	PVC, Ø 4 x 1 mm
Conical washer	POM
Balance chamber	Stainless steel
O rings	NBR
Screw-in tank adapter	PA6

5 Installation and commissioning

5.1 Installing the device

▶ Protect gauge from rain and direct sunshine.

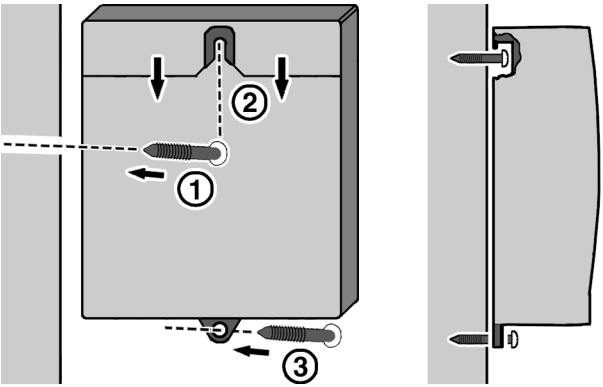

Fig. 3: Wall mounting

1 Drive screw into wall.

2 Hang housing onto screw.

3 Fix housing to wall with screw through lower fixing lug.

5.2 Adjusting the measuring range and the Zero correction

The accuracy of the gauge measurement is dependent on the exact adjustment of the measuring range and the Zero correction.

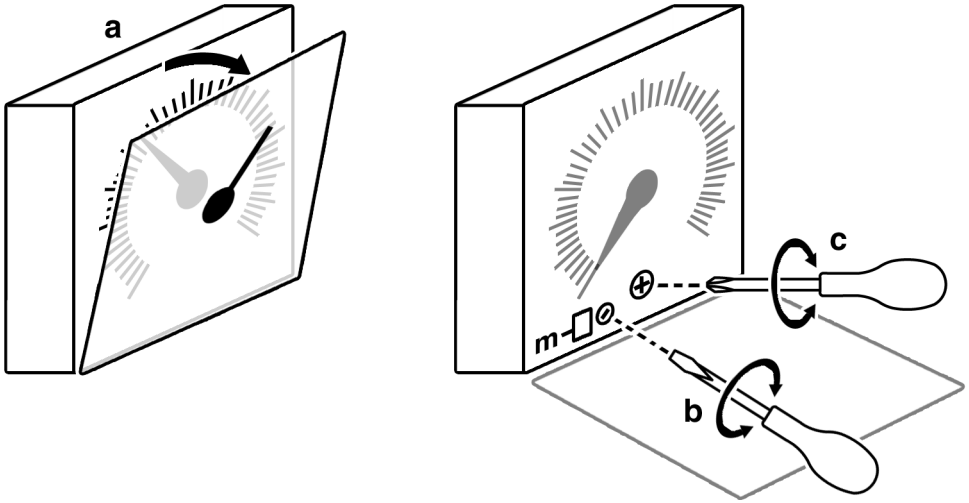

1. Determine measuring range:
   Fuel oil EL and diesel fuel: Measuring range = Tank height.
   Other liquids: See table 4, page 12.
2. Remove front glass (**a**).
3. Adjust measuring range accurately (**b**).
4. Tap housing gently on the side.
5. Adjust Zero correction (**c**): Set pointer to “0” by turning screw either to the left or right by maximum 1 full turn.
6. If applicable, insert slide-in-scale and then refit front glass.

5.3 Installing capillary line

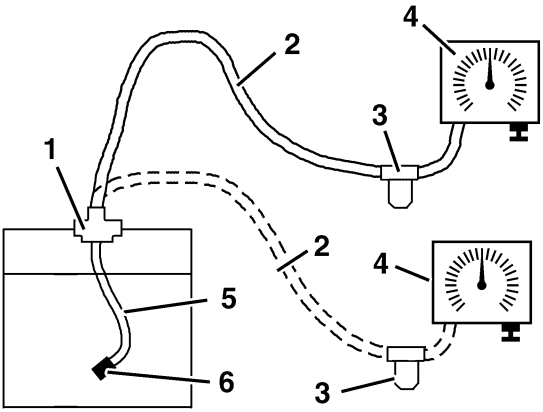

1 Screw-in tank adapter
2 Capillary tubing
3 Condensate trap
4 Gauge
5 Stand pipe
6 Balance chamber

Fig. 4: Installing capillary line

If no separate gauge connection socket is provided on the tank, it is possible to combine a number of capillary lines by connecting a Euroflex 3 combination fitting to a G1"-socket on the tank.

If required, the capillary measuring line can be extended with PE capillary tubing. The maximum distance between tank adapter and Gauge must not exceed 50 m. Connect standpipe to capillary line, using for instance a hose connector.

1. The lower end of the capillary tube should end approx. 2 cm above the lowest point of the tank bottom. Tighten cable gland in order to fix the standpipe in the tank adapter.
2. Screw tank adapter into a vacant boss in the top of the tank.
3. Install capillary line with a steady slope towards the tank, avoiding any kinks or possible water traps in the line.
4. Install a condensate trap if Gauge is mounted below the max. liquid level in the tank or in a place where condensate may collect.
5. Push connector onto capillary tube.

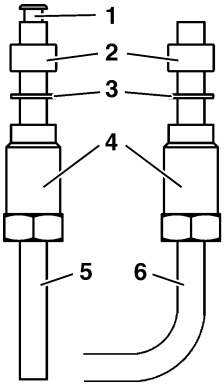

1 Hollow rivet
2 Grommet seal
3 Washer
4 Connector
5 Capillary standpipe
6 Pipe

6. Insert capillary line into connector and push in to the stop.
7. Tighten pressure screw gently.

6 Operation

Gauge provides a semi-permanent indication. The built-in pump closes off the measuring line when it reaches the end of its travel, the pointer stays temporarily at its last reading and then drops back very slowly. As a result of this the gauge mechanism is protected by an oil-stop air cushion.

Do not operate gauge during a tank filling operation as the gauge will not give a stable reading.

1. Pull out pump plunger to its stop and then release.

2. Repeat this process until the indication is stable.
3. Read tank contents on the dial of the gauge.

If the capillary measuring line has been installed absolutely airtight the pointer of the gauge will continue to show the last reading over a long period of time. In order to obtain an accurate up-to-date reading we recommend that you operate the pump everytime before a reading is taken.

The reference pointer can be adjusted manually. When set to the latest reading it serves for consumption control purposes.

7 Maintenance

Table 2: Maintenance intervals

When	Activity
Condensate trap contains water.	▶ Empty condensate trap.
At time of tank servicing or tank cleaning.	▶ Check gauge for correct function and, if necessary, have the instrument readjusted.

8 Troubleshooting

Repair work may only be carried out by qualified, specially trained personnel.

Table 3: Troubleshooting

Problem	Possible reason	Remedy
Pointer does not move when pump is operated or drops back again very quickly.	Connections are not airtight or the capillary lines are damged and leaking.	▶ Tighten connections and check capillary lines for air tightness.
	Filling process.	▶ Take measurement after the tank filling process.
Pointer goes beyond the 100 % mark or pump does not return fully to its stop.	Capillary line is either blocked or has a kink in it.	▶ Check that capillary line has no kinks in it and clear any blockage. ▶ Install condensate trap.
	Condensate trap full.	▶ Empty condensate trap.

Problem	Possible reason	Remedy
	The wrong measuring range has been adjusted.	▶ Check tank dimensions and correct measuring range, see chapter 5.2, page 7.
Wrong indication.	Measuring range adjusted wrongly.	▶ See above.
	Zero correction not correctly set.	▶ Reset Zero correction, see chapter 5.2, page 7.
Other malfunction.	–	▶ Return the device to the manufacturer.

9 Spare parts and accessories

Part	Part No.
Combination fitting Euroflex 3 with capillary tubing 2,15 m	20160
Combination fitting Euroflex 3 with capillary tubing 3,15 m	20164
Montagefix-extension set (10 m PE-capillary tubing 4 x 1 mm with capillary extension piece)	20132
Additional slide-in scales in litres for standardised tanks	725...

▶ When ordering, please specify the shape and capacity of tank.

Special slide-in scales for tanks of any shape and dimension	72599

▶ When ordering, please specify exact tank shape, size and capacity.

10 Warranty

The manufacturer's warranty for this product is 24 months from date of purchase. This warranty applies to all countries in which this product is sold by the manufacturer or its authorised representatives.

11 Copyright

The manufacturer holds the copyright to this manual. This manual may only be reprinted, translated, copied in part or in whole with the prior written consent of the manufacturer.

We reserve the right to modify any specifications or alter any illustrations in this manual without prior notice.

12 Customer satisfaction

Customer satisfaction is our prime objective. Please get in touch with us if you have any questions, suggestions or problems regarding your product.

13 Addresses

Commercial Fuel Solutions Ltd
City West, Millbrook Road East, Southampton SO15 1AH

14 Appendix

14.1 Determining the measurement range

Table 4: Determining the measurement range

Tank height [mm]	Specific gravity (density) of liquid to be measured [kg/m³]															
	700	720	740	760	780	800	820	840	860	880	900	920	940	960	980	1000
800													0,90	0,91	0,93	0,95
850											0,91	0,93	0,95	0,97	0,99	1,01
900								**0,90**	0,92	0,94	0,96	0,99	1,01	1,03	1,05	1,07
950						0,91	0,93	**0,95**	0,97	1,00	1,02	1,04	1,06	1,08	1,11	1,13
1000				0,90	0,93	0,95	0,98	**1,00**	1,02	1,05	1,07	1,10	1,12	1,14	1,17	1,19
1100	0,92	0,94	0,97	1,00	1,02	1,05	1,07	**1,10**	1,13	1,15	1,18	1,20	1,23	1,26	1,28	1,31
1200	1,00	1,03	1,06	1,08	1,11	1,14	1,17	**1,20**	1,23	1,26	1,29	1,31	1,34	1,37	1,40	1,43
1250	1,04	1,07	1,10	1,13	1,16	1,19	1,22	**1,25**	1,28	1,31	1,34	1,37	1,40	1,43	1,46	1,50
1300	1,08	1,11	1,14	1,18	1,21	1,24	1,27	**1,30**	1,33	1,36	1,39	1,42	1,45	1,48	1,52	1,55
1400	1,17	1,20	1,23	1,27	1,30	1,33	1,37	**1,40**	1,43	1,47	1,50	1,53	1,57	1,60	1,63	1,65
1500	1,25	1,28	1,32	1,36	1,39	1,43	1,46	**1,50**	1,54	1,57	1,60	1,64	1,68	1,71	1,75	1,79
1600	1,33	1,37	1,41	1,45	1,48	1,52	1,56	**1,60**	1,64	1,67	1,70	1,75	1,80	1,83	1,85	1,90
1700	1,42	1,46	1,50	1,54	1,58	1,62	1,65	**1,70**	1,75	1,78	1,82	1,85	1,90	1,95	1,98	2,00
1800	1,50	1,54	1,59	1,63	1,67	1,70	1,75	**1,80**	1,85	1,89	1,93	1,95	2,00	2,05	2,10	2,15
1900	1,58	1,63	1,67	1,72	1,75	1,80	1,85	**1,90**	1,95	2,00	2,08	2,12	2,10	2,15	2,20	2,25
2000	1,67	1,70	1,75	1,80	1,85	1,90	1,95	**2,00**	2,05	2,10	2,15	2,20	2,25	2,30	2,35	2,40
2100	1,75	1,80	1,85	1,90	1,95	2,00	2,05	**2,10**	2,15	2,20	2,25	2,30	2,35	2,40	2,45	2,50
2200	1,85	1,90	1,95	2,00	2,05	2,10	2,15	**2,20**	2,25	2,30	2,35	2,40	2,45	2,50	2,55	2,60
2300	1,95	2,00	2,05	2,10	2,15	2,20	2,25	**2,30**	2,35	2,40	2,45	2,50	2,55	2,60	2,65	2,70
2400	2,00	2,05	2,10	2,15	2,20	2,30	2,35	**2,40**	2,45	2,50	2,55	2,60	2,70	2,75	2,80	2,85
2500	2,10	2,15	2,20	2,25	2,30	2,40	2,45	**2,50**	2,55	2,60	2,70	2,75	2,80	2,85	2,90	3,00
2600	2,20	2,25	2,30	2,35	2,40	2,50	2,55	**2,60**	2,65	2,70	2,80	2,85	2,90	2,95	3,00	
2700	2,25	2,30	2,40	2,45	2,50	2,55	2,65	**2,70**	2,75	2,85	2,90	2,95	3,00			
2800	2,35	2,40	2,45	2,55	2,60	2,65	2,75	**2,80**	2,85	2,95	3,00					
2900	2,45	2,50	2,55	2,60	2,70	2,75	2,85	**2,90**	2,95							
3000	2,50	2,55	2,65	2,70	2,80	2,85	2,95	**3,00**								
3100	2,60	2,65	2,75	2,80	2,90	2,95										
3200	2,65	2,75	2,80	2,90	2,95											
3300	2,75	2,85	2,90	3,00												
3400	2,85	2,90	3,00													
3500	2,90	3,00														
3600	3,00															

Fuel oil EL/diesel fuel