ADR compliant Fuelstore with U.N. certification

[Product Description]

2000 litre (440 gallon) capacity bunded fuel storage tank, manufactured using an all steel double cylinder construction and mounted on a tough galvanised tubular steel base. Fully ADR compliant with U.N. approval, the Fuelstore 2000L is ideally suited to both site and industrial use. Features include a high-flow hand pump (flow rate 45 litres/min), anti-vandal lockable door, fully sealed rotary fuel gauge, large 2" & 3" alloy filler caps, automatic suction breather, pressure relief valve and an in-line fuel filter. The tank can be lifted full of fuel, using either the lifting eyes or the forklift pockets. The unique Fuelstore pump mounting plate can cater for a wide variety of fuel delivery options. Also fitted as standard are ½" BSP generator feed and return connections.

31A/Z/0505/GB/FUEL PROOF-4907/0/2560

APPROVED IBC

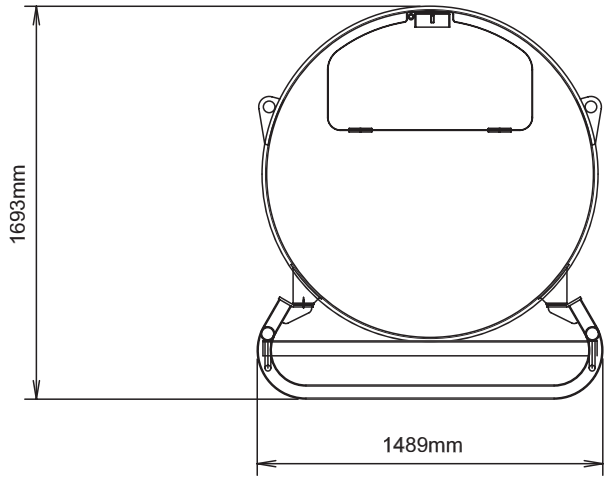

[Features]

- 2000 litre (440 gallon) capacity - fully bunded
- **ADR compliant** with **U.N. certification**
- Ideal for refuelling plant & machinery, groundcare equipment, generators and traffic control equipment
- Features galvanised tubular steel frame with forklift pockets
- Anti-vandal lockable door to protect delivery equipment and inner tank
- Fuel filter with replaceable element and water drain point
- High-flow hand pump (flow rate 45 litres/min)
- Fitted with automatic breather and pressure relief valve

[Optional Extras]

- 12v electric pump (40 & 85 litres/min)
- 3 digit flow meter - excellent for monitoring fuel usage
- 12v battery and carrier
- Auto shut-off trigger - flow rates from 40 to 120 litres/min

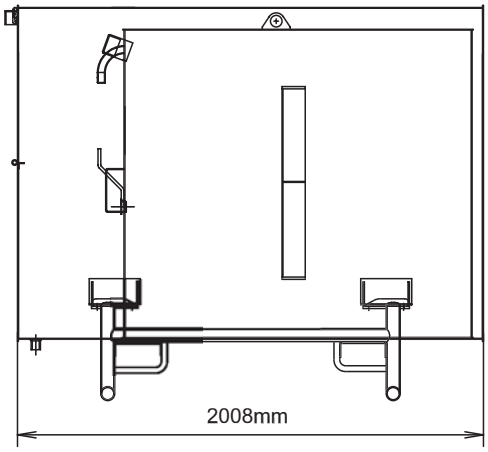

[Technical Information]

Length:	2008mm
Width:	1489mm
Height:	1693mm
Capacity:	2000 litres (440 gallons)
Weight (empty):	880kg
Weight (full):	2620kg
Filler neck:	2" & 3" BSP
Fuel delivery:	Hand or electric pump 4m hose and trigger