014030000 Rev. 0

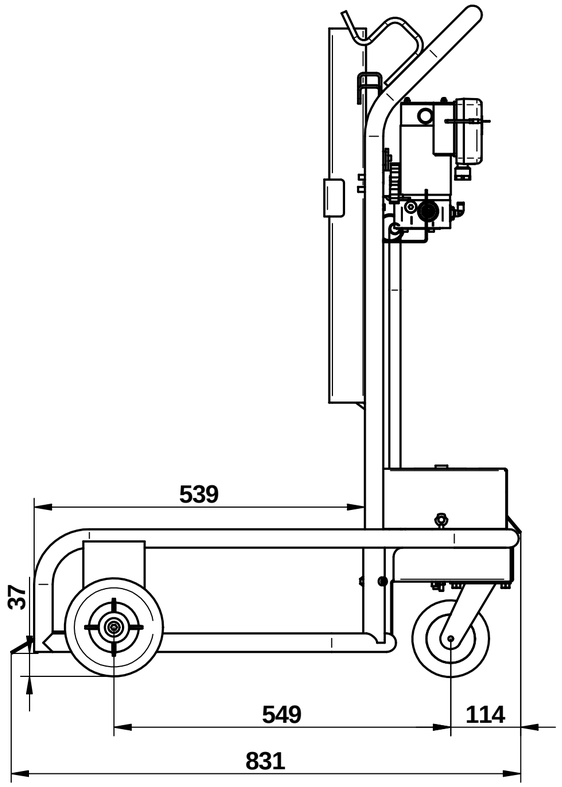

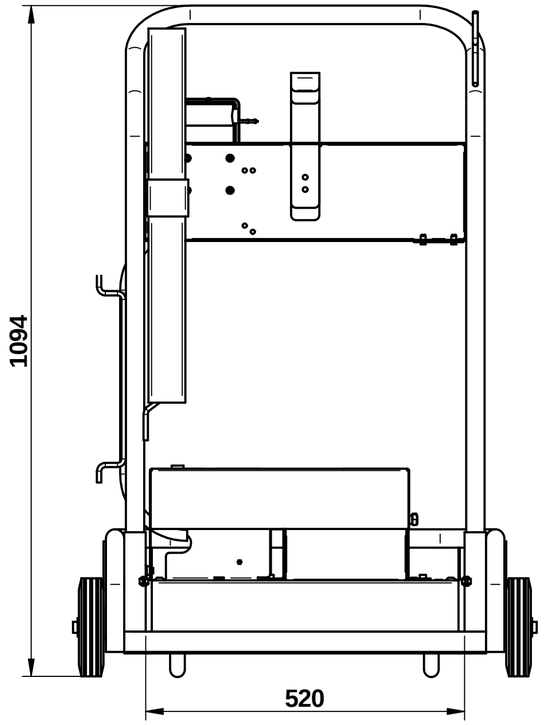

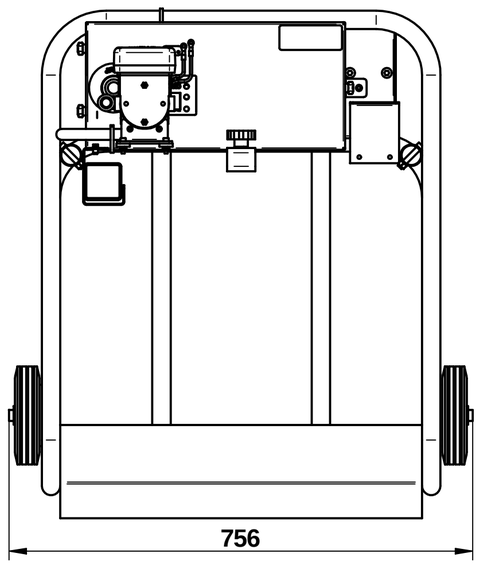

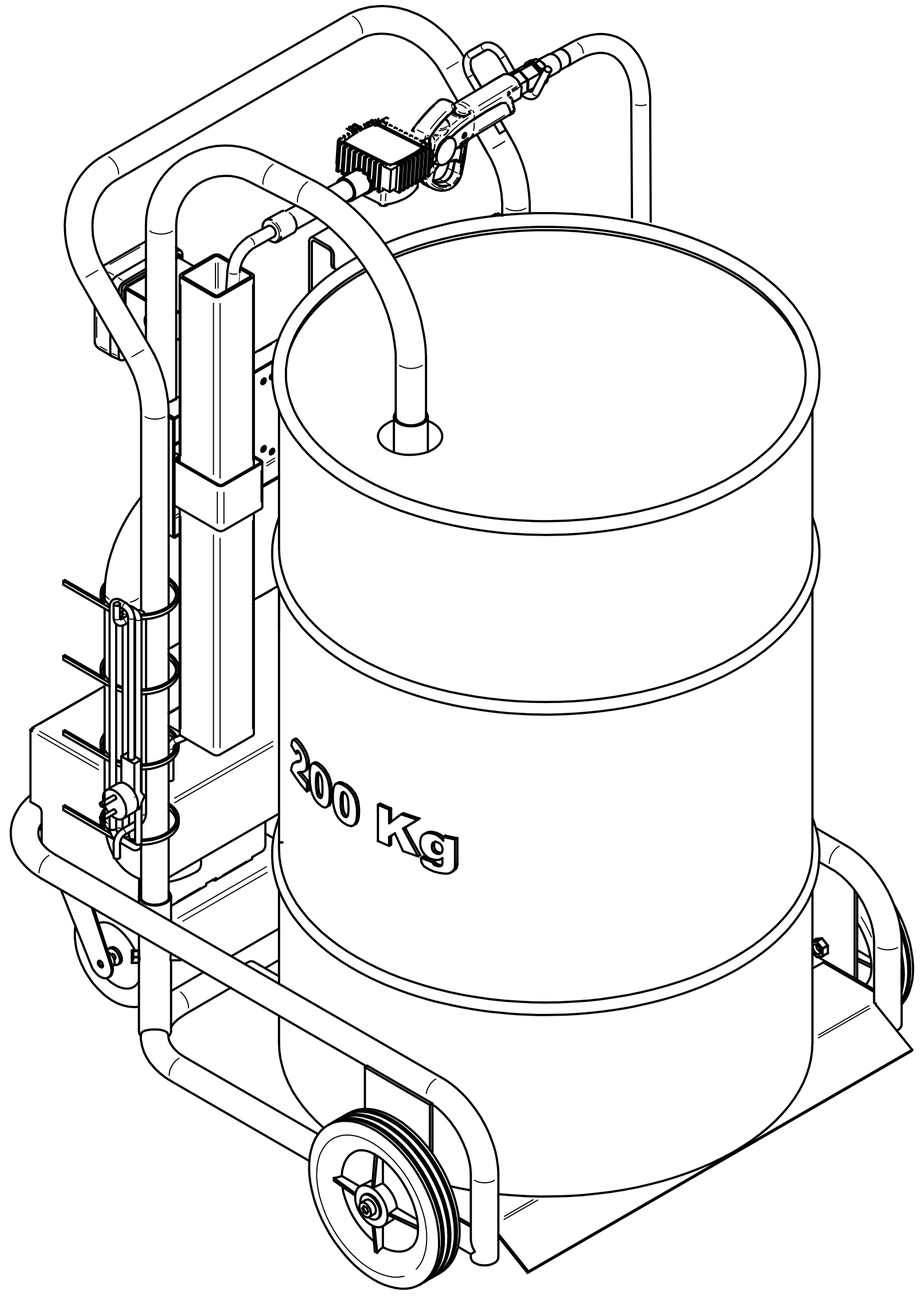

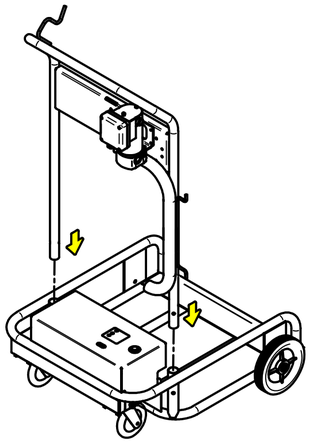

1

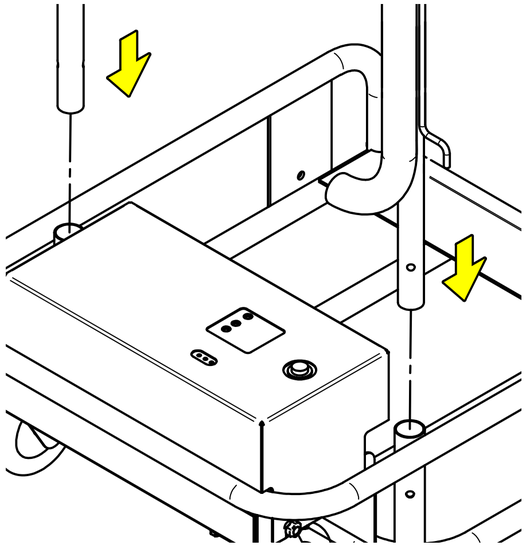

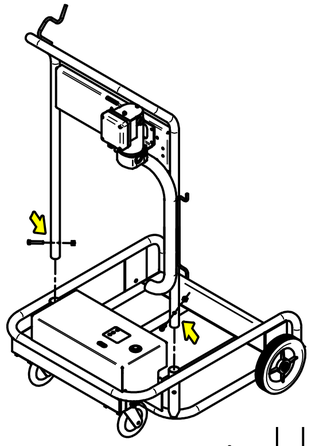

2

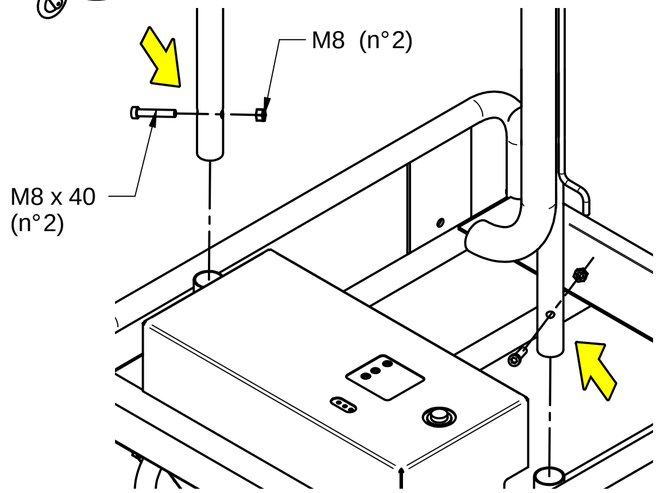

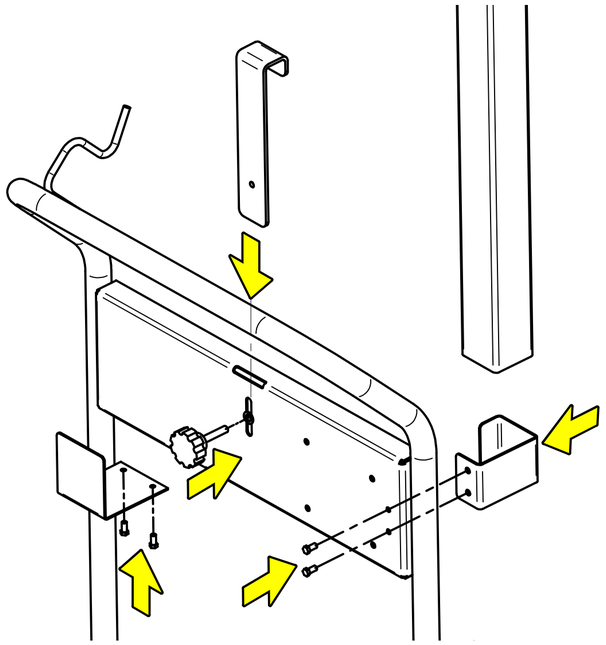

3

4

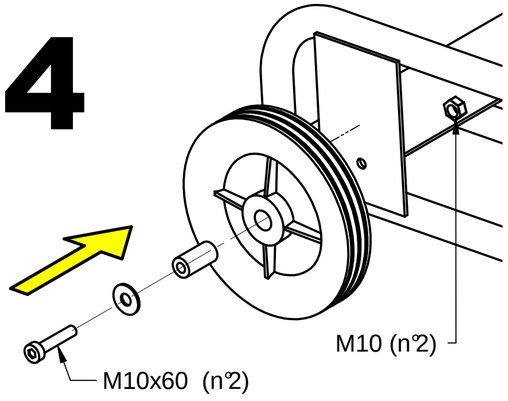

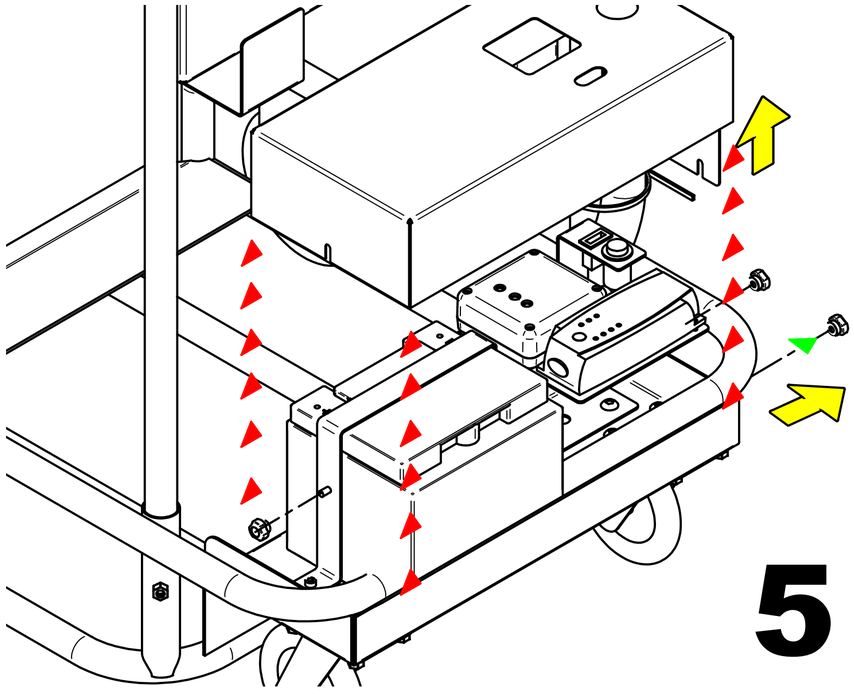

5

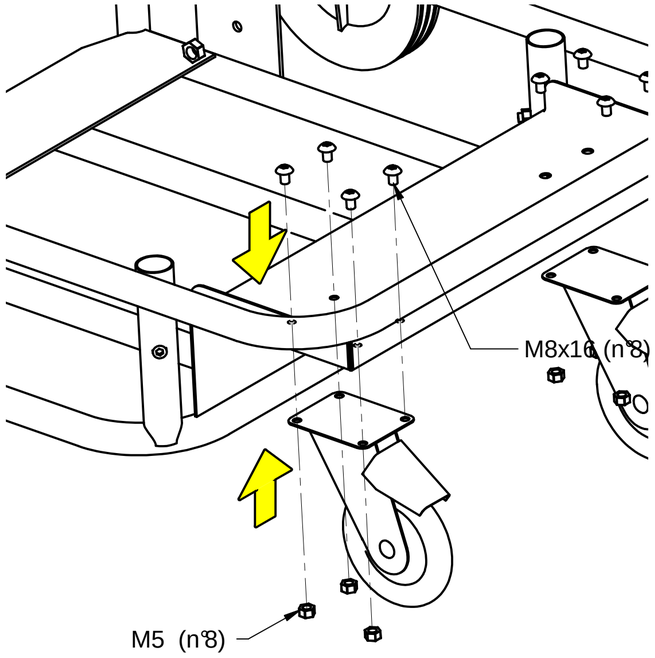

6

014030000 Rev. 0

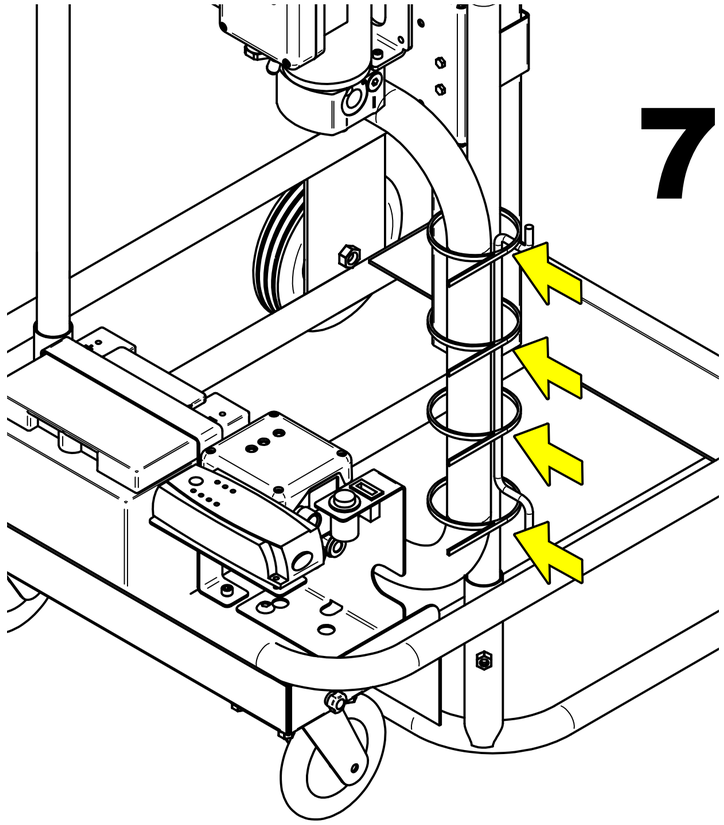

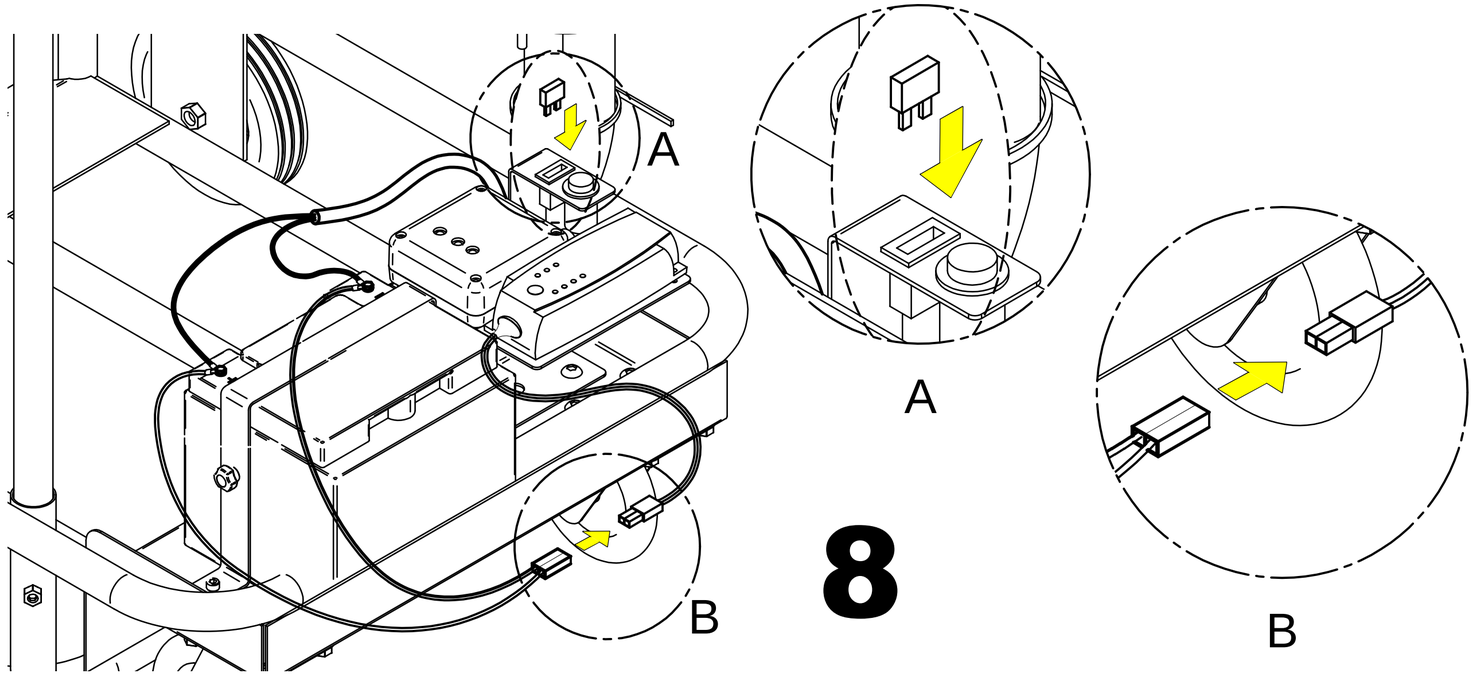

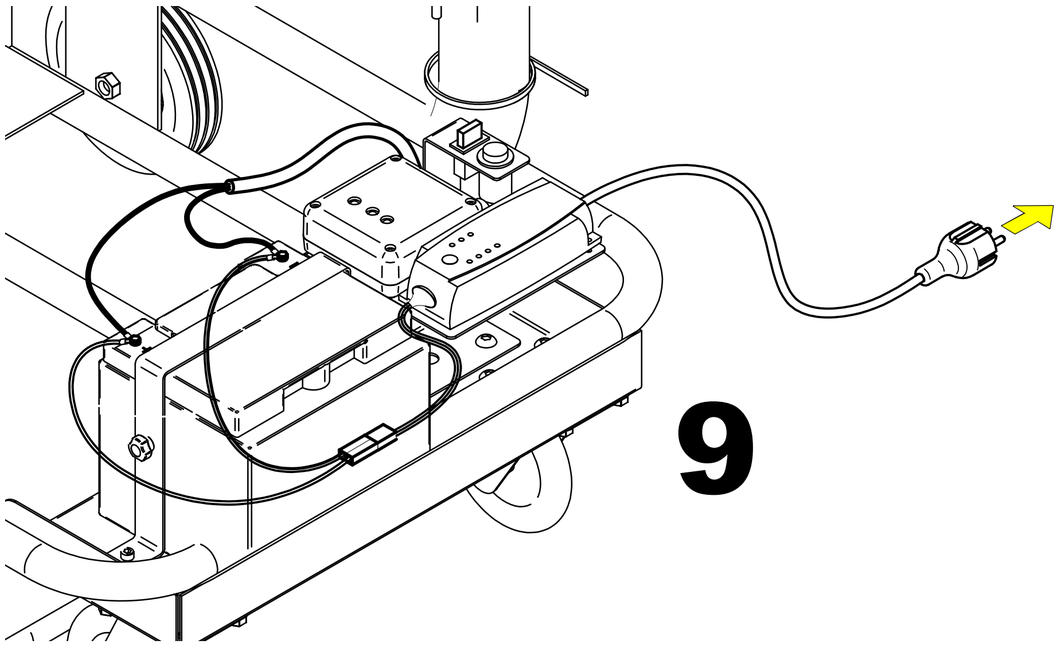

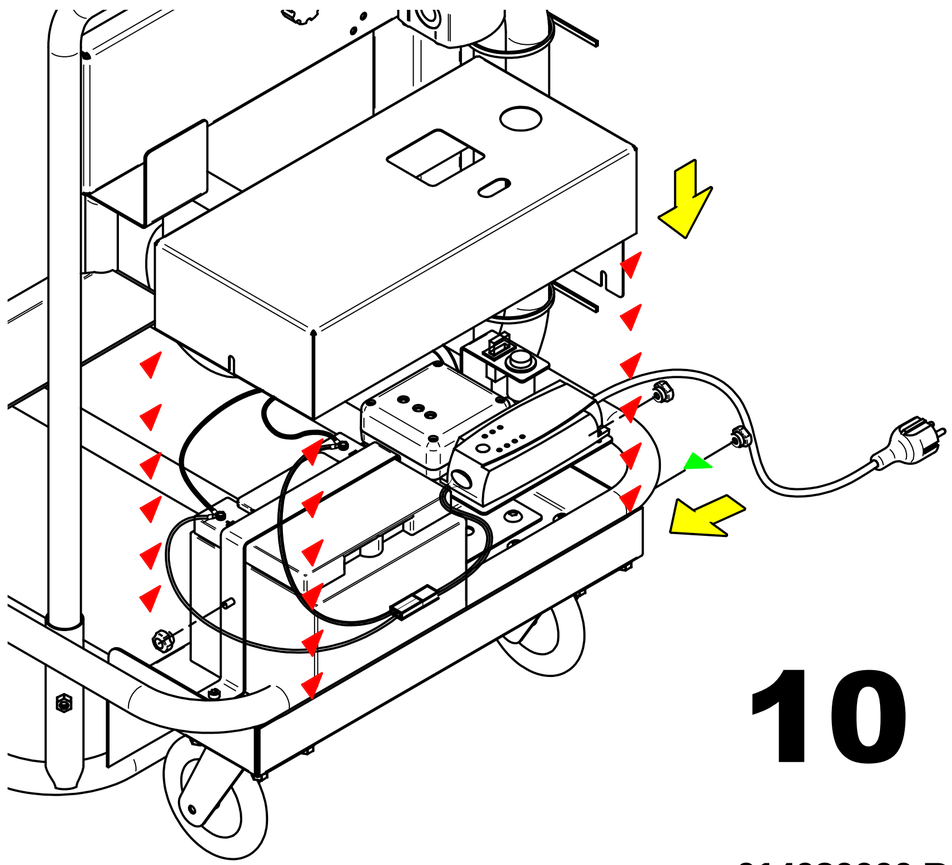

014030000 Rev. 0

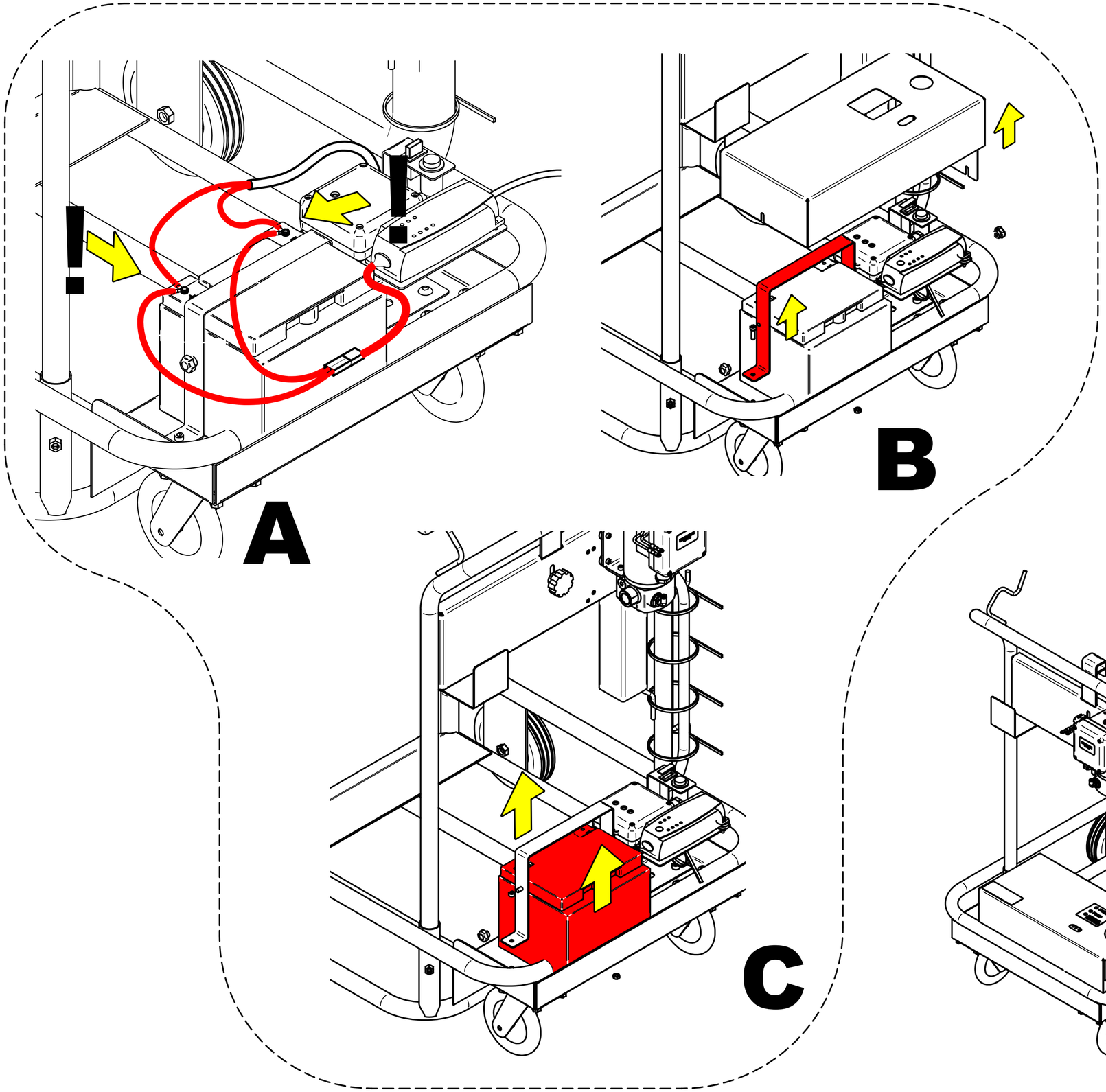

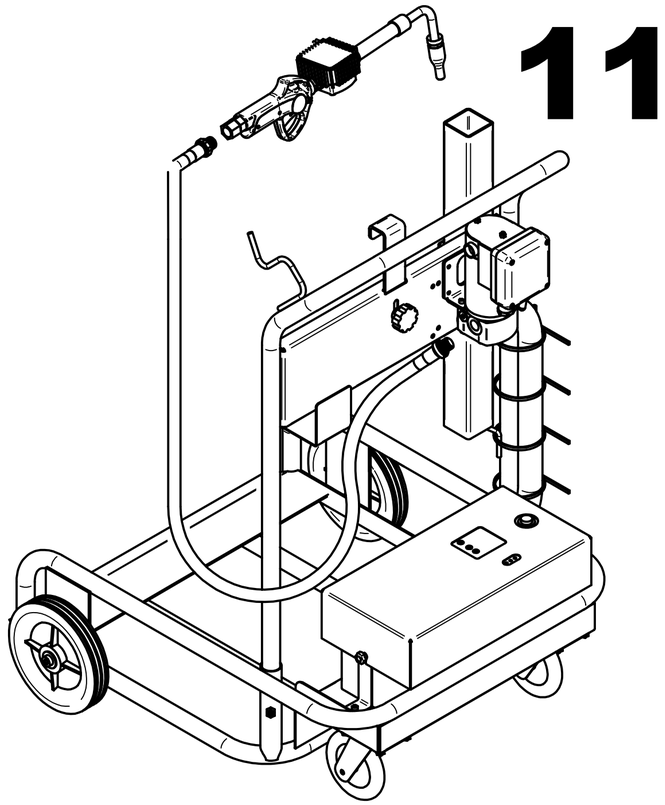

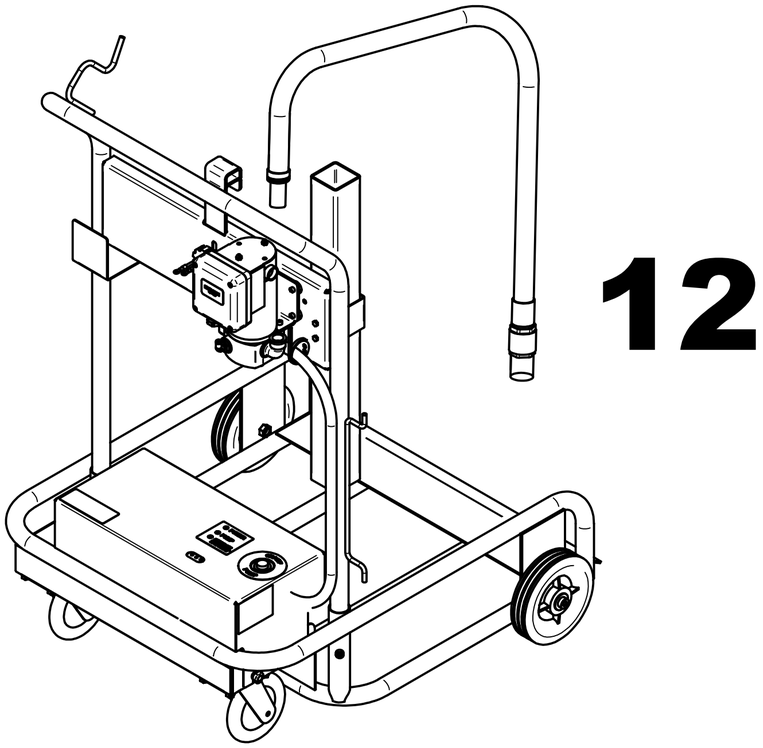

014030000 Rev. 0

TABLE OF CONTENTS

1 GENERAL

Viscotroll DC is a battery-powered oil-dispensing machine fitted with:

A 12 Vdc gear pump
B pressure switch to automatically switch the motor on and off during opening and closing of the dispenser
C flow meter with display (optional)
D control circuit board
E integrated battery-charger

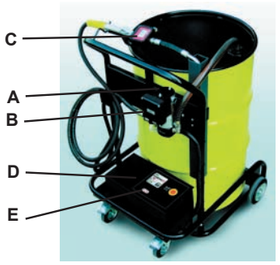

Viscotroll DC is designed to hold and carry 1 drum of lubricant oil of the following dimensions:
diameter: 58 cm
height: 88 cm
gross mass: 193 kg

1.1 Summary of functions

Viscotroll DC allows you to dispense oils at any time simply by pressing the trigger on the delivery nozzle. The pump will start automatically and the oil begins to flow. To stop the oil flow, simply release the trigger of the nozzle: the pressure switch is activated after a few seconds and the pump switches off automatically. Viscotroll DC is fitted with an electronic circuit board that controls the status of the battery and, by means of a LED, signals when it needs to be recharged. For more details, see the paragraphs that follow. The machine is fitted with an ON/OFF button which enables or disables motor operation, and with a timer for maximum dispensing time.

2. GENERAL WARNINGS

During the assembly and use of Viscotroll DC, follow the general safety warnings listed below:

UNPACKING

Viscotroll DC should be unpacked by 2 people, taking care to ensure that the package is in the correct position as indicated by the arrows. Take out the trolley only after having fitted the handle onto its base. Once the handle has been secured in accordance with the steps shown on the assembly diagram provided, remove it completely from the packaging and carry on with the subsequent assembly phases.

POWER SUPPLY - ASSEMBLY

Disconnect the power during the entire assembly process. Do not connect the battery and charger before assembly has been completed.

USE

Permitted uses: the unit must always be used for the purpose intended. Follow the instructions contained in this manual.

Overheating: although the pump is fitted a pressure switch, always check that it stops when no oil has been dispensed for more than 2 minutes. Stop the pump by pressing the ON/OFF button.

Protective Gloves: Prolonged contact with particularly aggressive oils could cause skin irritation. It is recommended that you use protective gloves when dispensing the oil.

Vapours: When lubricant oil is dispensed, particularly in environments with high temperatures, take precautions against the inhalation of harmful vapours (for example, using a mask). Dispense oil in well-ventilated areas.

REPAIR

Service: the unit should be serviced by qualified personnel only. Please contact the dealer if you require further information or assistance.

NB: FIT THE FUSE AS THE LAST STEP OF THE ASSEMBLY PROCESS, AS INDICATED IN THE ASSEMBLY DIAGRAM.

3 SAFETY

3.1 Load the drum onto Viscotroll DC

Two people are always required to load the oil drum onto the Viscotroll DC trolley.
The manufacturer recommends that the drum be loaded according to the following procedure:
1 – Load the drum onto a "transpallet"-type platform truck, adjusting the height so that it is level with the Viscotroll DC loading platform.
2 – Engage the brakes on the wheels of the Viscotroll DC and ensure that they are working properly.
3 – Move the transpallet closer to Viscotroll, so that they are facing each other.
4 – Engage the brakes on the wheels of the transpallet and ensure that they are working properly.
5 – With 2 people, one on either side of the transpallet, push the oil drum which will pass from the forks of the transpallet to the Viscotroll DC trolley.
6 – Block the oil drum using the hook provided on the Viscotroll DC.

3.2 Accidental oil spill

In case of an accidental lubricant oil spill, cover the surface where the spill has occurred immediately with sawdust or a similar material, which can quickly absorb the substance as well as make the area safe against the risk of falling. Dispose of the oil-soaked substance in accordance with local regulations in the country of use.

3.3 Disposal

If the station has to be demolished, the parts of which it is composed must be sent to companies that specialize in the disposal and recycling of industrial refuse and, in particular: Dispose of the lubricant oil in accordance with local regulations in the country of use.

English

3.4 Battery-charger safety

RECHARGING

Electrical precautions: Dangerous voltages are present during the charging of the battery: only authorized and qualified technical personnel should be allowed access to the unit.
- The battery-charger is for use with 1,2-120 Ah acid lead batteries.
  Do not use it for anything else.
- Always wear protective eyewear and keep your face away from the battery when switching the unit on and off.
- The batteries could release explosive gases during recharging. Ensure that there are no sparks or flames near the battery.
- Ensure that there is adequate ventilation during recharging.
- Battery acid is corrosive. If the acid comes into contact with your skin or eyes, rinse with water immediately. See a doctor.
- Do not recharge a frozen battery.

4 ASSEMBLY

4.1 Mechanical assembly of trolley and hydraulic part

To assemble, refer to the illustrated assembly instructions.

CONNECT SUCTION LINE AND DELIVERY LINE BY USING THE PROPER SEALING PASTE TO GUARANTEE PRESSURE SEAL

BEFORE CONNECTING THE SUCTION HOSE TO THE PUMP, WET THE INSIDE OF THE PUMP BODY WITH OIL THROUGH THE UPPER ELBOW. BEFORE CONNECTING, MAKE SURE THAT THE PUMP IS COMPLETELY FULL OF OIL INSIDE.

4.2 Final electrical collections (fuse and battery-charger connector)

See the illustrated assembly instructions.

4.3 Charging the battery for the first time (setting the battery-charger)

NOTE: Everything mentioned in this paragraph is relative to the battery charger and the indicator lights present on it. These indicator lights must NOT be confused with those on the electronic circuit board, which are described in paragraph 5.3

1 Set the appropriate voltage for the battery by pressing the "MODE" button on the mode selector until the indicator light that corresponds to the symbol goes on

2 Once you have checked that the battery cables are connected correctly, connect the power supply cable to the socket to start recharging. If the battery cables are not connected correctly, the integrity of the battery-charger will be guaranteed by the polarity inversion switch. In this case, the fault indicator light will be on and the recharge process will have to be restarted.

3 When the recharge indicator light is on it means the battery is being recharged, whereas the status light indicates that the battery has been completely recharged. If the voltage drops, the battery-charger sends a pulse to the battery. The duration of the pulse depends on the intensity of the drop. The battery-charger can stay connected for several months. If the Viscotroll DC is not used for long periods (months), ensure that the battery-charger is in "slow charge" mode, as indicated by the symbol:

4 No indication: if the voltage indicator is on but all the other indicator lights are off, it is possible that the battery-charger has not been connected properly to the battery or that the battery is faulty. Check the electrical socket. If there are problems: first check the connection between the terminals and the battery-charger.

5 The recharge process can be interrupted at any time by disconnecting the power supply cable or by setting the battery-charger to standby mode. Always disconnect the power supply cable from the socket before disconnecting the cables from the battery inside the vehicle.

6 Alternate flashing of the recharge and maintenance indicator lights could be due to the following:
• The recharge process has been interrupted following a loose connection or the battery not operating.
• The battery has been sulphatized. Prolonged flashing lasting longer than 30 minutes indicates that the battery is run-down and must be replaced.
• An interval exceeding 10 seconds between flashes indicates that the battery's self-discharge percentage is high and it may be necessary to replace it.

First recharge time: In general, 6-8 hours are sufficient when charging for the first time
NOTE: Refer to chapter 6.1 for more information on replacing the battery

5 USE

5.1 Purpose

The Viscotroll DC station is suitable for professional use, to transfer oil with a maximum viscosity of 1100 cSt, which can be assimilated to SAE 10W-40 type oil at an operating temperature of 7°C and SAE 80W-90 type oil at an operating temperature of 14°C.

5.2 Normal dispending (with battery fully or partially charged)

To dispense the oil (with battery fully or partially charged), it is sufficient to press the trigger of the dispensing nozzle. The pump will start automatically and the oil begins to flow. To stop the oil flow, simply release the trigger of the nozzle: the pressure switch is activated after a few seconds and the pump switches off automatically.

5.3 Battery status

Viscotroll DC is fitted with an electronic circuit board that controls the status of the battery and, by means of 2 LEDs (green and red), signals when it needs to be recharged.
A third LED (yellow) indicates the status of the motor (ON or OFF).
The status of this LED depends on:
* the charge of the battery;
* the user manually pressing the ON/OFF button;
* the operation of the timer for maximum dispensing time

When the yellow LED is off the pump motor will not start. The red button must be pressed to restart the pump and for the yellow LED to light up again.
Below is a table showing the status of the LEDs in relation to the status of the system:

Battery status LED		Motor status LED	Status
Green LED	Red LED	Yellow LED	
On	Off	On	Battery full. Dispensing possible
Off	Flashing	On	Battery half-full. Dispensing possible. We recommend that the the battery be charged.
Off	On	Off (due to the battery voltage being too low)	Battery low. Dispensing impossible. Necessary battery charge
Not conclusive	Not conclusive	Off due to: - manually pressing the ON/OFF button or - due to the intervention of the TIMER	If the pump is switched off by pressing the ON/OFF button or if the timer for maximum dispensing time has intervened, the yellow LED goes off. Dispensing impossible even if the battery is fully charged. Press the ON/OFF button, switching the yellow LED on again.

table 1

IMPORTANT: During pump operation, the electronic circuit board suspends the battery charge level control to allow for complete dispensing to take place. Therefore, a situation may arise in which you start off with the yellow and green LEDs on and, once the dispensing is finished (particularly if it is very long), the yellow and green LEDs go off and the red LED goes on. Due to its nature, the battery will recover some charge after a while, the red LED will begin to flash and the yellow LED will go on allowing you to dispense more oil. It is nevertheless recommended that the battery be charged as soon as possible.

English

5.4 ON/OFF button

use in case of emergency or to switch off once dispensing is finished

The machine is fitted with an ON/OFF button which allows you to enable or disable the pump, in accordance with the table in paragraph 5.3.

NOTE: if the red LED is on, the pressure of the red button has no effect on the operation of the pump.

For example, it is necessary to disable the pump if there is no oil inside the drum or if there are leaks in the pipes, which makes it necessary to carry out maintenance on them (the pump would therefore always be on because there is never any pressure in the pressure switch).

5.5 Setting and using the Timer for maximum dispensing time

The Timer for maximum dispensing time, which can be removed and adjusted by means of the DIP-SWITCH and which has times of 10, 20 and 30 minutes that can be selected (see table 2), blocks the pump if the dispensing time exceeds the maximum time that has been set.

The default setting is shown in the following diagram, Timer active, 10 minutes maximum dispensing.

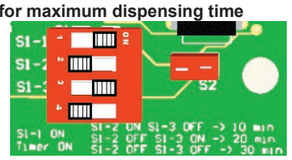

SWITCH S1				TIMER
1	2	3	4	
OFF	OFF	OFF	OFF	DISABLED
ON	ON	OFF	OFF	10 Minutes
ON	OFF	ON	OFF	20 Minutes
ON	OFF	OFF	OFF	30 Minutes

table 2

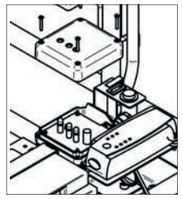

To access the timer, open the electrical box in which the electronic circuit board is found loosening the 4 screws. The timer begins to operate each time the pump is switched on and, if enabled, it allows the pump to operate for the maximum time that has been set.
This function is particularly useful in case of breakage or pressure loss in the hydraulic pipes when the operator is not present. The timer would stop the pump before any damage is caused to Viscotroll DC.
To restart the pump after it has been stopped by the timer if the red LED is not on, the red button must be pressed.
The yellow LED goes on to indicate that the pump can start dispensing again.

6 MAINTENANCE

6.1 Maintenance of electrical parts

6.1.1 Recharging the battery

From the second recharge onwards, to recharge the battery all you have to do is insert the plug of the battery-charger in an electrical socket. If the battery provided (44Ah) is completely empty, the duration of the recharge should be approximately 15 hours.

6.1.2. Replacing the fuse

If the fuse blows, first check the reasons that caused this, then replace it with another one of the same type, a 30A blade fuse (light green). For further details, refer to the attached assembly diagram. We recommend that spare parts from the manufacturer be used.

6.1.3 Replacing the battery

When the battery does not work anymore, replace it with another one of the same type, TRACTION GEL, with the same power 44AH. We recommend that spare parts from the manufacturer be used. Connect the red wire to the positive pole of the battery and the black one to the negative pole. For the battery replacement procedure, refer to the attached assembly diagram (see pict. A, B, C).

7 PROBLEMS AND SOLUTIONS

Problem	Possible cause	Possible solution
When you press the trigger of the nozzle, the pump does not switch on.	Batter run-down, red LED constantly on	recharge the battery
	Motor disabled (Yellow LED off) due to: - manually pressing the ON/OFF button or - due to the intervention of the TIMER	press the ON/OFF button to bring it back to ON (yellow LED on)
	30A fuse blown	replace the fuse following the instructions
	The pressure switch does not intervene	contact the manufacturer
	Mosfet fault	contact the manufacturer
The pump does not switch off a few seconds after having released the trigger	The pressure switch does not intervene	check that the oil drum is not empty
	The pressure switch does not intervene and the drum is not empty	contact the manufacturer
The pump does not switch off after 10 (or 20 or 30 if the default settings have been changed) minutes of uninterrupted operation	Electronic circuit board faulty or MOSFET circuit board short-circuiting	f, when you press the ON/OFF button, the pump switches off, the problem is with the MOSFET circuit board. Contact the manufacturer
The battery does not stay charged	battery worn	replace the battery

8 ELECTRICAL DIAGRAM

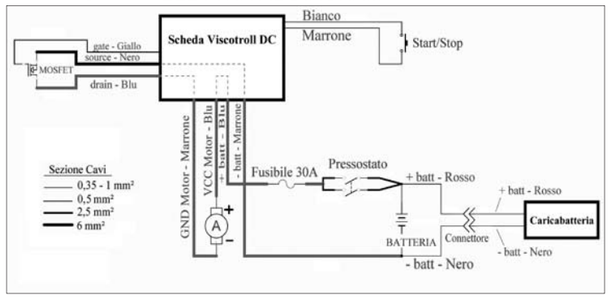

M0136 rev. 1

VISCOTROLL DC